Autoliv	Service Brake Bleed Procedure	E1061513

AUTOLIV ELECTRONIC document. Duplication and disclosure not allowed without prior written authorization.

Autoliv Electronics - 2 -
Service Brake Bleed Procedure E1061513

Table of Contents

1. Introduction 3
1.1. Glossary 3
2. Communication 4
2.1. Diagnostic Service 4
2.1.1. Request Message Definition 4
2.1.2. Positive Response Message 4
2.1.3. Negative Response Message 4
2.2. Tester Present 5
2.2.1. Request Message Definition 5
2.2.2. Positive Response Message 5
2.2.3. Negative Response Message 5
2.3. Input Output Control By Identifier 5
2.3.1. Request Message Definition 6
2.3.2. Positive Response Message 7
2.3.3. Negative Response Message 8
3. Service Brake Bleed 9
3.1. Procedure 9
3.2. Diagnostic Communications 9
3.2.1. Front Right – Rear Left Release Valve On 9
3.2.2. Front Left – Rear Right Release Valve On 9
3.2.3. Normal Valve State and Motor On 10
3.2.4. Release and Prime Valve On and Motor On 10
3.2.5. Normal State 10
Appendix A: Commands Needed for Input Output Control by Identifier 11

AUTOLIV ELECTRONIC document. Duplication and disclosure not allowed without prior written authorization.

AUTOLIV ELECTRONIC document. Duplication and disclosure not allowed without prior written authorization.

Established by	Reviewed by	Reviewed by	Approved by
Name: Date: Visa:	Name: Date: Visa:	Name: Date: Visa:	Name: Date: Visa:

Table of Contents

1. Introduction 4
1.1. Glossary 4
2. Communication 5
2.1. Diagnostic Service 5
2.1.1. Request Message Definition 5
2.1.2. Positive Response Message 5
2.1.3. Negative Response Message 5
2.2. Tester Present 6
2.2.1. Request Message Definition 6
2.2.2. Positive Response Message 6
2.2.3. Negative Response Message 6
2.3. Input Output Control By Identifier 6
2.3.1. Request Message Definition 7
2.3.2. Positive Response Message 8
2.3.3. Negative Response Message 9
3. Service Brake Bleed 10
3.1. Procedure 10
3.2. Diagnostic Communications 10
3.2.1. Front Right – Rear Left Release Valve On 10
3.2.2. Front Left – Rear Right Release Valve On 10
3.2.3. Normal Valve State and Motor On 11
3.2.4. Release and Prime Valve On and Motor On 11
3.2.5. Normal State 11
Appendix A: Commands Needed for Input Output Control by Identifier 12

AUTOLIV ELECTRONIC document. Duplication and disclosure not allowed without prior written authorization.

1. Introduction

This document is intended as a reference document, which describes the functionality and diagnostic communication services of the IRBC (Integrated Restraint and Brake Controller) System used during the service bleed procedure for **dry** hydraulic unit only. This document is **NOT** the specification for the diagnostic functionality of the IRBC System.

1.1.Glossary

Keyword	Meaning
EOL	End of Line
IRBC	Integrated Restraint and Brake Controller
SHA	Smart Hydraulic Actuator

AUTOLIV ELECTRONIC document. Duplication and disclosure not allowed without prior written authorization.

2. Communication

All CAN communication will use CAN ID 0x731 to send messages to IRBC and CAN ID 0x739 to receive responses.

2.1. Diagnostic Service

The Diagnostic session control service shall be used to enable diagnostic sessions in the IRBC. A diagnostic session represents a set of diagnostic services which are able to be executed in this session. In general this means that a session defines an applicable amount of functionality.

2.1.1. Request Message Definition

Data Byte	Parameter Name	Message Usage	Hex Value
#1	Diagnostic Session Control Request Service ID	M	10
#2	Sub Function = [Diagnostic Session Type] Default Session Extended Diagnostic Session	M	 01 03

2.1.2. Positive Response Message

Data Byte	Parameter Name	Message Usage	Hex Value
#1	Diagnostic Session Control Response Service ID	M	50
#2	Sub Function = [Diagnostic Session Type] Default Session Extended Diagnostic Session	M	 01 03
 #3 : : #n	Session Parameter Record [] =[P2Can_ECU_max (high byte) P2Can_ECU_max (low byte) P2*Can_ECU_max (high byte) P2*Can_ECU_max (low byte)]	 M : : M	 00-FF : : 00-FF

2.1.2.1. Session Parameter Record Definition

	Definition	Min	Max
P2Can_ECU_max	Performance requirement for the ECU to start with the response message after the reception of a request message.	0 ms	50 ms
P2*Can_ECU_max	Performance requirement for the ECU to start with a further response message after the transmission of a negative response message.	0 ms	5000 ms

2.1.3. Negative Response Message

Data Byte	Parameter Name	Message Usage	Hex Value
#1	Negative Response	M	7F
#2	Diagnostic Session Control Request Service ID	M	10
#3	Response Code = [Sub-Function Not Supported Incorrect Message Length Or Invalid Format Condition Not Correct]	M	 12 13 22

AUTOLIV ELECTRONIC document. Duplication and disclosure not allowed without prior written authorization.

2.2. Tester Present

This service is used by the diagnostic test tool to indicate to an ECU or a group of ECU’s that a diagnostic test tool is connected to the bus and therefore certain diagnostic sessions and/or communication that have been activated have to remain active.

2.2.1. Request Message Definition

Data Byte	Parameter Name	Message Usage	Hex Value
#1	Tester Present Request Service Id	M	3E
#2	Sub-Function = [Zero Sub-Function] Positive Response Required No Positive Response Required	M	 00 80

2.2.2. Positive Response Message

Data Byte	Parameter Name	Message Usage	Hex Value
#1	Tester Present Response Service ID	M	7E
#2	Sub-Function = [Zero Sub-Function] Positive Response Required	M	 00

2.2.3. Negative Response Message

Data Byte	Parameter Name	Message Usage	Hex Value
#1	Negative Response	M	7F
#2	Tester Present	M	3E
#3	Response Code = [Sub-Function Not Supported Incorrect Message Length Or Invalid Format]	M	 12 13

2.3. Input Output Control By Identifier

The InputOutputControlByIdentifier service is primarily used by IRBC to control some of the outputs (actuators) of the electronic system. In another word, it is used as Device Control. The client request message contains a dataIdentifier to reference a group of signals of the server. The server shall send a positive response message if the request message can be successfully executed.

Exiting Device Control
Some of the components excited by I/O Control commands will remain active for a while (settling time) even after they have been de-activated by I/O Control command. When any of the following conditions are met, the system will begin to terminate this service. The system will, however, remain in the I/O Control until it is determined that the commanded component(s) is / are no longer active. The system will then return control to normal operation. During the component settling time, the system is allowed to go back to this service. The exiting conditions are:
1. Positively responded to a new diagnostic session request.
2. Any Output Control limit is exceeded. See section 2.4.3 Negative Response Message Data Bytes
3. The active Session is timed out after 5s without test present.

This service is only supported if requested by Physical address mode.

AUTOLIV ELECTRONIC document. Duplication and disclosure not allowed without prior written authorization.

2.3.1. Request Message Definition

Process Equipment to IRBC (shortTermAdjustment)

Data Byte	Parameter Name	Cvt	Hex Value
#1	inputInputOutputControlByIdentifier Request Sid	M	2F
#2 #3	dataIdentifier #1 [] = [byte #1 (MSB) byte #2 (LSB)]	M	 31 07
#4	inputOutputControlParameter=[shortTermAdjustment]	M	03
 #5 #6 #7	ControlOptionRecord #1 = [ControlState#1 ControlState#2 ControlState#3]	 M M M	 00-FF 00-FF 00-FF

Process Equipment to IRBC (returnControlToECU)

Data Byte	Parameter Name	Cvt	Hex Value
#1	inputInputOutputControlByIdentifier Request Sid	M	2F
#2 #3	dataIdentifier #1 [] = [byte #1 (MSB) byte #2 (LSB)]	M	 31 07
#4	inputOutputControlParameter=[returnControlToECU]	M	00

Definiton
dataIdentifier This parameter identifies a server local input signal(s), internal parameter(s) or output signal(s). The applicable range of values for this parameter can be found in the table of dataIdentifiers defined in Section 2.1.1.1 DID $3100 ~ $311F DeviceControl. In our implementation the high byte of the dataIdentifier is used as the "Control Packet ID" or CPID and the low byte is used as the control enable bytes. However it is not used as an enable control of the particular device through this service but a control ON enable byte.
controlOptionRecord The controlOptionRecord of each dataIdentifier consists of one or multiple bytes (controlState#1 to controlState #m). ControlState#1 can be used as an additional controlState byte

2.3.1.1. Control State Definition

Control State	Bit #	Definition	Units	Range	Command Resolution
#1	7	Rear Right Release Solenoid On-Off Control Command	N/A	N/A	On = 1, Off=0
	6	Rear Right Apply Solenoid On-Off Control Command	N/A	N/A	On = 1, Off=0
	5	Rear Left Release Solenoid On-Off Control Command	N/A	N/A	On = 1, Off=0
	4	Rear Left Apply Solenoid On-Off Control Command	N/A	N/A	On = 1, Off=0

AUTOLIV ELECTRONIC document. Duplication and disclosure not allowed without prior written authorization.

	3	Front Right Release Solenoid On-Off Control Command	N/A	N/A	On = 1, Off=0
	2	Front Right Apply Solenoid On-Off Control Command	N/A	N/A	On = 1, Off=0
	1	Front Left Release Solenoid On-Off Control Command	N/A	N/A	On = 1, Off=0
	0	Front Left Apply Solenoid On-Off Control Command	N/A	N/A	On = 1, Off=0
#2	7	Primary Prime Solenoid On-Off Control Command	N/A	N/A	On = 1, Off=0
	6	Secondary Prime Solenoid On-Off Control Command	N/A	N/A	On = 1, Off=0
	5	Primary Isolation Solenoid On-Off Control Command	N/A	N/A	On = 1, Off=0
	4	Secondary Isolation Solenoid On-Off Control Command	N/A	N/A	On = 1, Off=0
	3	Not Used.	N/A	N/A	N/A
	2	Not Used.	N/A	N/A	N/A
	1	Pump Motor On/Off Control Command	N/A	N/A	On = 1, Off=0
	0	System Relay Control Command	N/A	N/A	On = 1, Off=0
#3	All	Not Used.	N/A	N/A	N/A

2.3.2. Positive Response Message

IRBC to Process Equipment (shortTermAdjustment)

Data Byte	Parameter Name	Cvt	Hex Value
#1	inputInputOutputControlByIdentifier Positive Response Sid	S	6F
#2 #3	dataIdentifier #1 [] = [byte #1 (MSB) byte #2 (LSB)]	M	31 07
#4	inputOutputControlParameter=[shortTermAdjustment]	M	03
#5 #6 #7	ControlOptionRecord #1 = [ControlState#1 ControlState#2 ControlState#3]	M M M	00-FF 00-FF 00-FF

IRBC to Process Equipment (returnControlToECU)

Data Byte	Parameter Name	Cvt	Hex Value
#1	inputInputOutputControlByIdentifier Positive Response Sid	S	6F
#2 #3	dataIdentifier #1 [] = [byte #1 (MSB) byte #2 (LSB)]	M	31 07
#4	inputOutputControlParameter=[returnControlToECU]	M	00

AUTOLIV ELECTRONIC document. Duplication and disclosure not allowed without prior written authorization.

2.3.3. Negative Response Message

Data Byte	Parameter Name	Cvt	Hex Value
#1	negativeResponse Service Id	S	7F
#2	inputInputOutputControlByIdentifier Request Sid	M	2F
#3	ResponseCode = [incorrectMessageLengthOrInvalidFormat ConditionsNotCorrect RequestOutOfRange serviceNotSupportedInActiveSession VehicleSpeedLimitExceeded MotorOrSolenoidThermalLimitExceeded SystemVoltageOutOfRange]	M	 13 22 31 7F 86 88 93

2.3.3.1. ResponseCode Definition

Hex	Condition
13	**incorrectMessageLengthOrInvalidFormat** Wrong length for the specific request
22	**ConditionsNotCorrect** This response code shall be sent if the operating conditions of the ECU are such that it can't perform the required action. The system is currently in initialization or shutdown process. The system is in the process of changing memory.
31	**RequestOutOfRange** Wrong inputOutputLocalIdentifier
7F	**serviceNotSupportedInActiveSession** The service is not enabled in the current diagnostic session.
86	**MotorOrSolenoidThermalLimitExceeded** This code will be returned any time the device exits I/O Control due to its internal protection algorithms. That is, any of the solenoids or motor has been commanded active for an excessive period of time that may begin to damage the device. Please note that this response can be send unsolicited.
88	**VehicleSpeedLimitExceeded** This code will be returned any time the device exits I/O Control due to an unsafe condition. That is, the vehicle speed ≥ 5 KPH, while the device's is not currently in SafetySystemDiagnosticSession. Please note that this response can be send unsolicited.
93	**SystemVoltageOutOfRange** This code will be returned any time the device exits I/O Control due to the ignition voltage not been sufficient Please note that this response can be send unsolicited.

AUTOLIV ELECTRONIC document. Duplication and disclosure not allowed without prior written authorization.

3. Service Brake Bleed

3.1.Procedure

Base Brake Bleed must be completed before the below procedure is performed.

A. Apply the brake pedal several times. Then strongly stroke the brake pedal. (Keep pedal application held between step B and C)
B. Trigger diagnostic tool to run below sequence, refer to section 3.2 Needed Communications for more info.
C. When modulator has stopped operating. Loosen the bleeder screw. Brake fluid and air will be discharged. After bleeding has stopped, tighten the bleeder screw.
D. Steps A-C must be repeated for a total of 5 times before moving to next wheel.
E. Carry out steps A-D on each wheel on the vehicle.

3.2. Diagnostic Communications

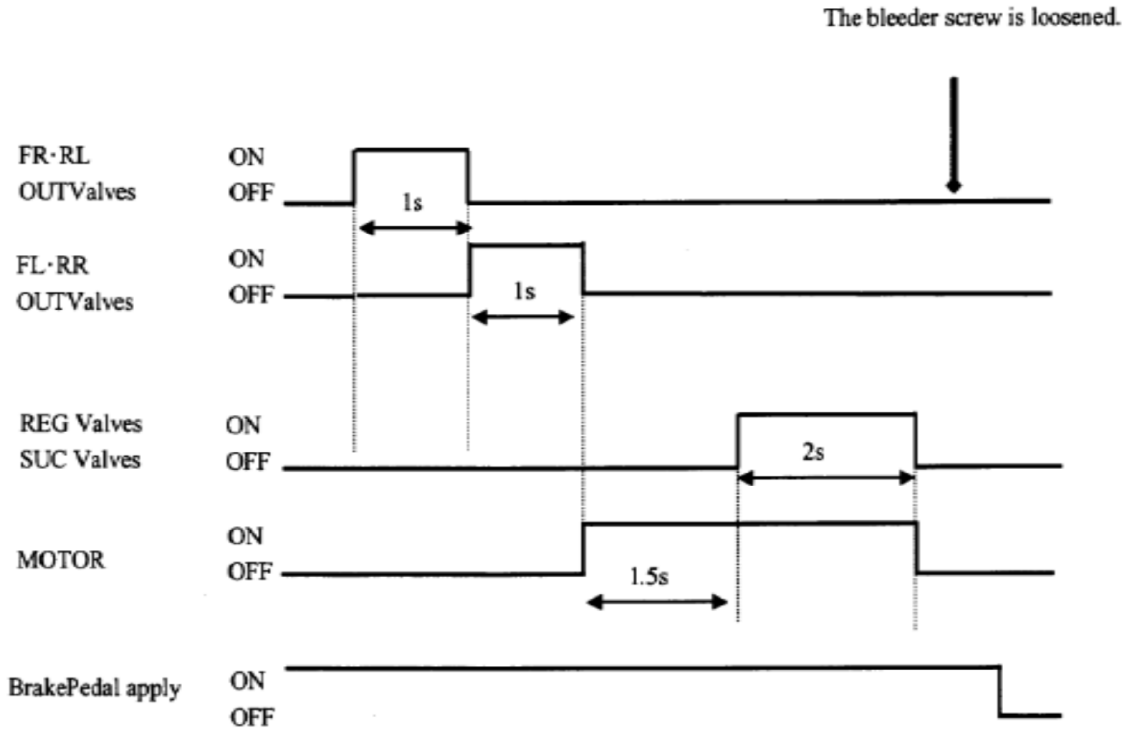

3.2.1. Front Right – Rear Left Release Valve On

CAN Diagnostic Message Data 07 2F 31 07 03 14 01 00 hex

3.2.2. Front Left – Rear Right Release Valve On

CAN Diagnostic Message Data 07 2F 31 07 03 82 01 00 hex

AUTOLIV ELECTRONIC document. Duplication and disclosure not allowed without prior written authorization.

3.2.3. Normal Valve State and Motor On

CAN Diagnostic Message Data 07 2F 31 07 03 00 02 00 hex

3.2.4. Release and Prime Valve On and Motor On

CAN Diagnostic Message Data 07 2F 31 07 03 AA C3 00 hex

3.2.5. Normal State

CAN Diagnostic Message Data 04 2F 31 07 00 00 00 00 hex

AUTOLIV ELECTRONIC document. Duplication and disclosure not allowed without prior written authorization.

Appendix A: Commands Needed for Input Output Control by Identifier

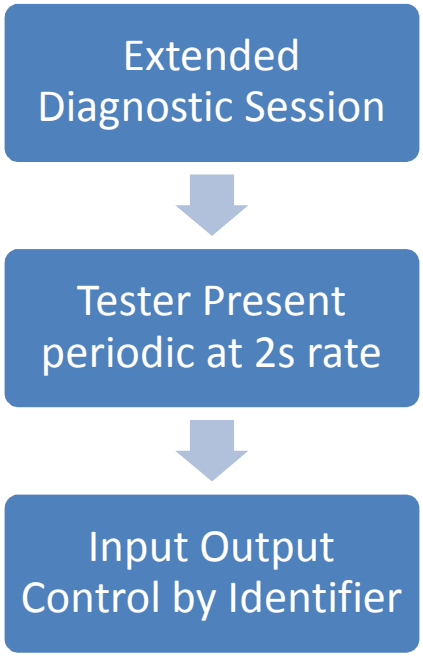

AUTOLIV ELECTRONIC document. Duplication and disclosure not allowed without prior written authorization.